**AXOR One**
**Overhead shower 75 1jet EcoSmart with shower arm**
Surfaces: **Stainless Steel Optic** Article Number: **48490800**

**product features**

- consists of: overhead shower, shower arm
- shower head size: 73 mm
- spray type: PowderRain
- projection 116 mm
- ball-joint: overhead shower angle adjustable
- material spray disc: metal
- shower arm length 85 mm
- maximum flow rate at 3 bar: 8,7 l/min
- flow rate PowderRain spray (at 3 bar): 8,7 l/min
- function from: 6,3 l/min
- minimum flow pressure: 1 bar
- overhead shower removable for cleaning
- installation: wall
- connection thread G ½
- connection dimension: DN15
- suitable for continous flow water heaters

## Technology

EcoSmart

Quick Clean

## Design awards

DESIGN AWARD 2021

## Certificates

DIN DVGW CERT

## Product image

## Scale drawing

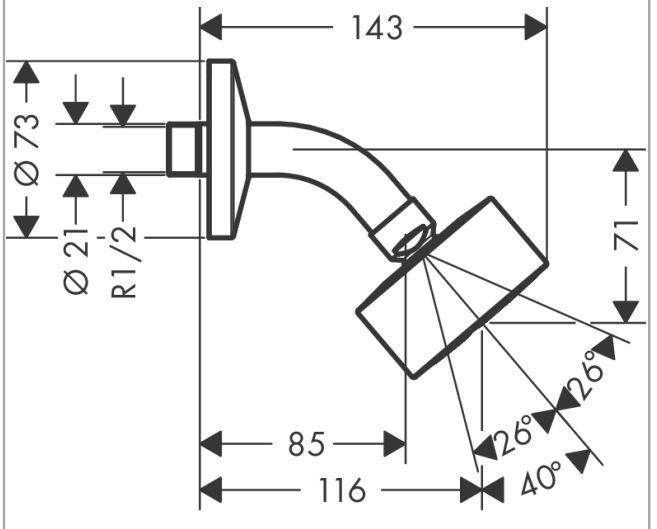

**AXOR One**
**Overhead shower 75 1jet EcoSmart with shower arm**
Surfaces: **Stainless Steel Optic** Article Number: **48490800**
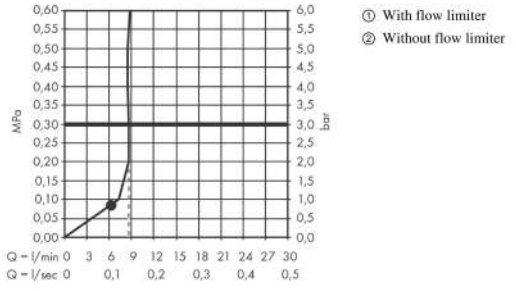
## Flowchart