AXOR One
Single lever bidet mixer with pop-up waste set
Surfaces: **Brushed Gold Optic** Article Number: **48210250**

product features

- consists of: single lever bidet mixer, waste set
- projection 113 mm
- spout height: 100 mm
- aerator with ball pivot
- spray type: normal spray
- maximum flow rate at 3 bar: 5 l/min
- ceramic cartridge
- temperature limitation adjustable
- suitable for continous flow water heaters
- pop-up waste set G 1¼
- material waste set: metal
- connection type: G ⅜ connections
- connection dimension: DN15

Technology

AirPower

Product image

Scale drawing

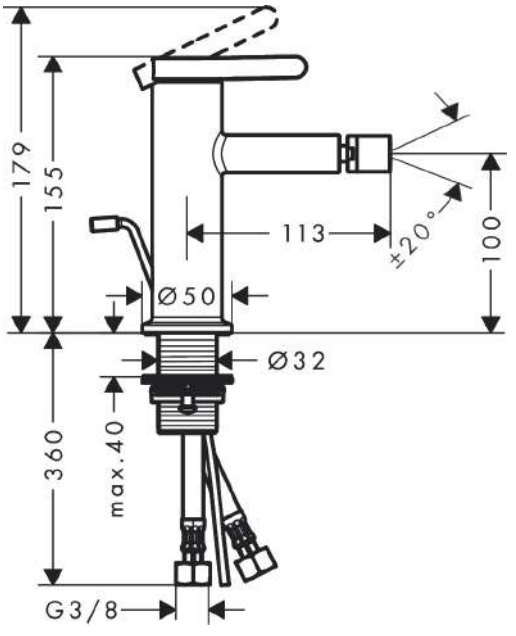

AXOR One
Single lever bidet mixer with pop-up waste set
Surfaces: **Brushed Gold Optic** Article Number: **48210250**
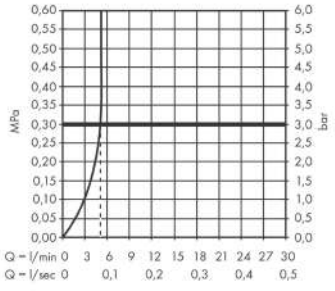
Flowchart