AXOR

AXOR One
2-hole basin mixer Select 260 with push-open waste set
Surfaces: **Matt Black** Article Number: **48060670**

product features

- consists of: 2-hole basin mixer, waste set
- ComfortZone 260
- projection: 165 mm
- spout height: 267 mm
- swivel range 120°
- spray type: normal spray
- maximum flow rate at 3 bar: 5 l/min
- Select cartridge with temperature control
- temperature limitation adjustable
- suitable for continuous flow water heaters
- push-open waste set G 1¼
- material waste set: metal
- connection type: G ⅜ connections
- flexible arrangement of control unit and spout possible
- the control unit needs approx. 20 cm space underneath the top

Technology

Select SELECT | AirPower | Comfort Zone

Certificates

DIN DVGW CERT

Product image

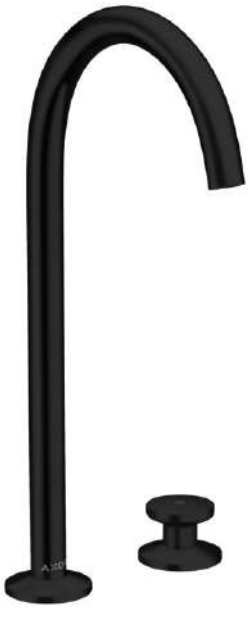

Scale drawing

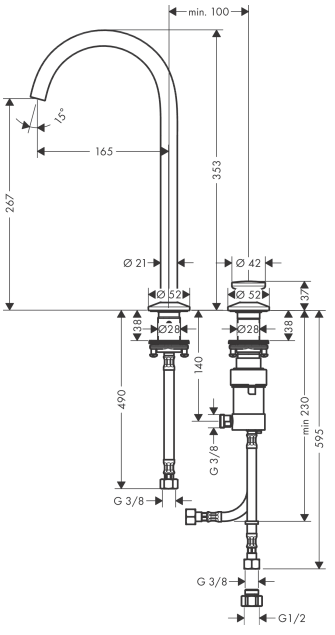

AXOR

AXOR One
2-hole basin mixer Select 260 with push-open waste set
Surfaces: **Matt Black** Article Number: **48060670**

Flowchart

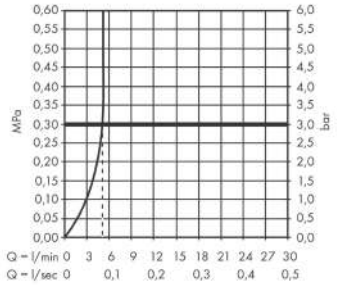

AXOR

AXOR One
2-hole basin mixer Select 260 with push-open waste set
Surfaces: **Matt Black** Article Number: **48060670**

Exploded Drawing

Year of production: **>04/21**

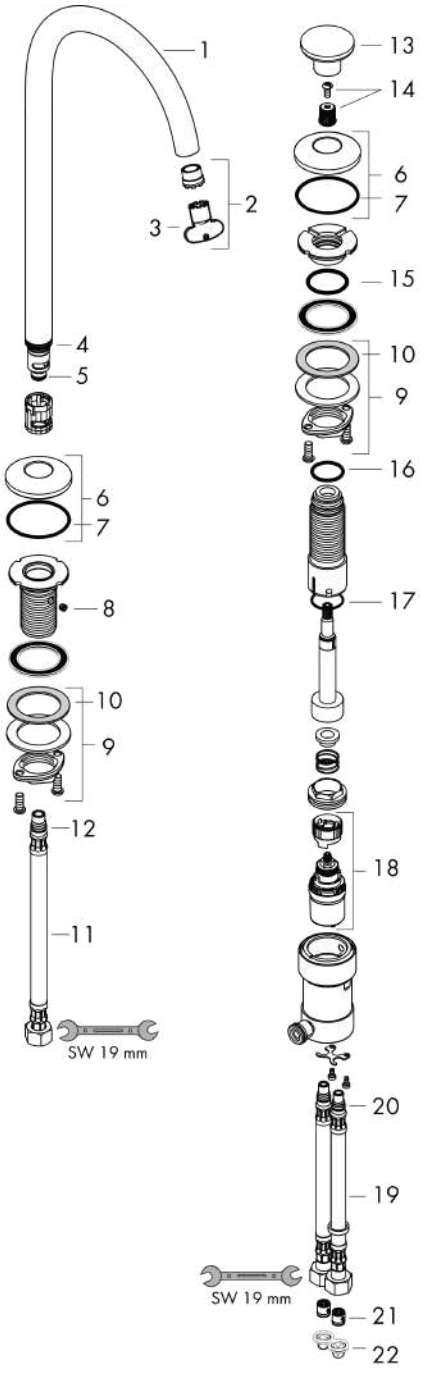

AXOR

AXOR One
2-hole basin mixer Select 260 with push-open waste set
Surfaces: **Matt Black** Article Number: **48060670**

Spare part list

Year of production: **>04/21**

Pos.		Article Number	Price	PU
1	spout cpl.	93996670	€ 187,43	1
2	aerator cpl.	93118000	€ 22,37	1
3	special tool	98987000	€ 8,45	1
4	O-ring 18x1,5	98231000	€ 3,21	1
5	O-ring 9x1,5	98117000	€ 3,21	1
6	escutcheon	93998670	€ 53,91	1
7	O-Ring 46x2	98195000	€ 3,21	1
8	hollow set screw M5x5	98446000	€ 3,21	1
9	fixing set (Ø 28)	92909000	€ 35,94	1
10	lever collar	97548000	€ 3,21	1
11	connection hose 450 mm M10x1 G3/8	96507000	€ 35,94	1
12	O-ring 8x1,75	97827000	€ 3,21	1
13	handle	93997670	€ 67,00	1
14	handle fixing set	98932000	€ 13,92	1
15	O-ring 28x2,5	98209000	€ 3,21	1
16	O-Ring 22x2	98185000	€ 3,21	1
17	O-ring 23x1,5	92287000	€ 3,21	1
18	cartridge, assy	92529000	€ 100,44	1
19	connection hose 450 mm M8x0,75 G3/8	93405000	€ 35,94	1
20	O-ring 7x1,5	98422000	€ 3,21	1
21	non return valve DW 10	96456000	€ 8,45	1
22	filter packing	95291000	€ 11,31	1
a	push-open waste set	50100670	-	1