AXOR

AXOR One
2-hole basin mixer Select 260 with push-open waste set
Surfaces: **Brushed Chrome** Article Number: **48060260**

product features

- consists of: 2-hole basin mixer, waste set
- ComfortZone 260
- projection: 165 mm
- spout height: 267 mm
- swivel range 120°
- spray type: Normal spray
- maximum flow rate at 3 bar: 5 l/min
- Select cartridge with temperature control
- temperature limitation adjustable
- suitable for continuous flow water heaters
- push-open waste set G 1¼
- material waste set: metal
- connection type: G ⅜ connections
- flexible arrangement of control unit and spout possible
- the control unit needs approx. 20 cm space underneath the top

Technology

Select SELECT · AirPower · Comfort Zone

Certificates

DIN DVGW CERT

Product image

Scale drawing

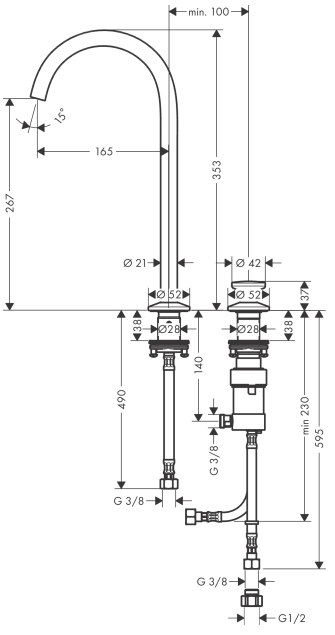

AXOR

AXOR One
2-hole basin mixer Select 260 with push-open waste set
Surfaces: **Brushed Chrome** Article Number: **48060260**
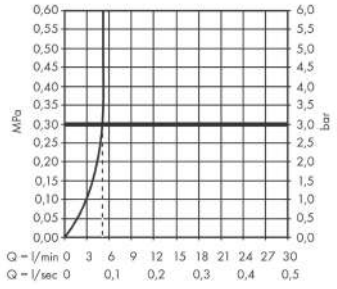
Flowchart