AXOR

AXOR MyEdition
Single lever bath mixer floor-standing without plate
Surfaces: Art. no. : **47442310**

product features

- Consists of: Floor-standing single lever bath mixer, baton hand shower, shower hose, shower holder
- designed to run 2 outlets
- spout 196 mm long
- Spray type mixer: normal spray
- Spray type hand shower: Rain, Mono
- Maximum flow rate (at 3 bar): 20 l/min
- Flow rate for bath spout (at 3 bar): 20 l/min
- Flow rate of hand shower (at 3 bar): 13 l/min
- Ceramic cartridge
- Maximum temperature can be adjusted on installation
- diverter with automatic resetting
- Non-return valve
- Noise class: I
- Connection type: basic set
- Min. operating pressure: 1 bar
- Max. operating pressure: 10 bar

Article Details

Price excl. VAT	£ 3,424.00

Technology

Product image

Scale drawing

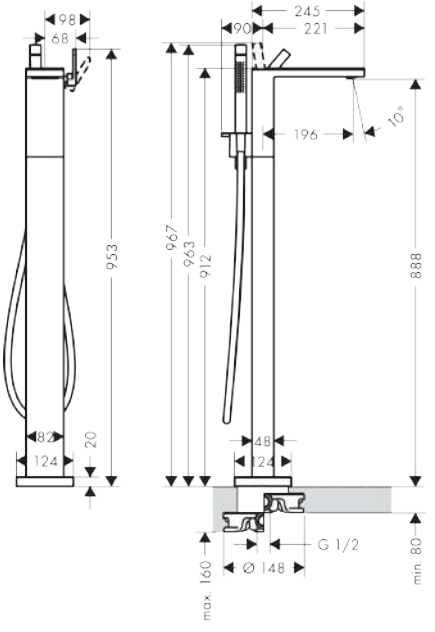

AXOR MyEdition
Single lever bath mixer floor-standing without plate
Surfaces: Art. no. : **47442310**
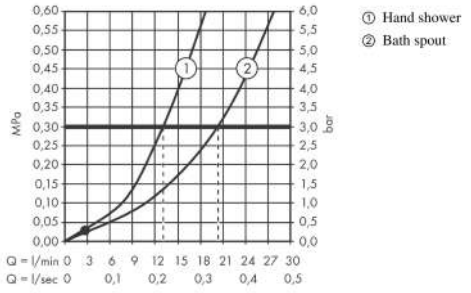
Flowchart