AXOR

AXOR MyEdition
Single lever basin mixer for concealed installation wall-mounted with spout 221 mm without plate
Surfaces: Art. no. : **47062930**

product features

- Consists of: single lever basin mixer for concealed installation, waste set
- spout 221 mm long
- wall-mounted
- Spray pattern: PowderRain
- Maximum flow rate (at 3 bar): 5 l/min
- Min. operating pressure: 1 bar
- Max. operating pressure: 10 bar
- Ceramic cartridge
- with isolated water conduction - without contact with nickel and lead
- non-closing waste set
- handle can be positioned on the right or left, depending on the basic set installation
- QuickClean technology for easy limescale removal
- Kiwa UK 1909702

Article Details

Price excl. VAT	£ 1,096.70

Technology

EcoSmart

Quick Clean

Certificates

kiwa

Product image

Scale drawing

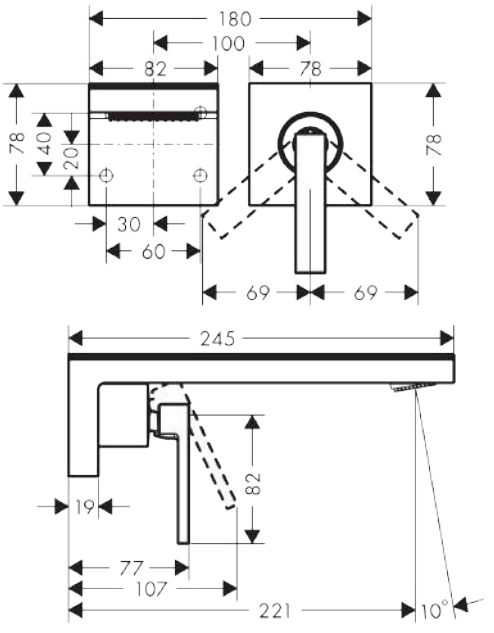

AXOR MyEdition
Single lever basin mixer for concealed installation wall-mounted with spout 221 mm without plate
Surfaces: Art. no. : **47062930**
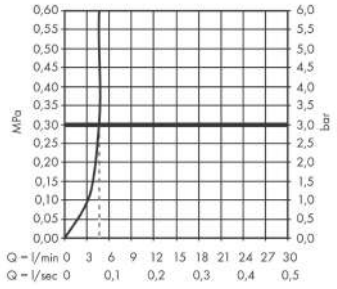
Flowchart