AXOR

**AXOR Edge**
**Rim-mounted bath set**
Surfaces: **polished gold-optic** Art. no. : **46470990**

**product features**

- Consists of: baton hand shower, escutcheon, hose box, shower hose
- suitable for installation on bath rim
- sBox for quiet, smooth and protected hose guidance
- Connection thread ½"
- Operating pressure: min. 1 bar/max. 10 bar
- no additional maintenance opening required
- Maximum pull-out length of hand shower 1.45 m
- removable for service at any time
- Maximum flow rate (at 3 bar): 10 l/min

## Article Details

| | |
|---|---|
| Price excl. VAT | £ 809.20 |

## Product image

## Scale drawing

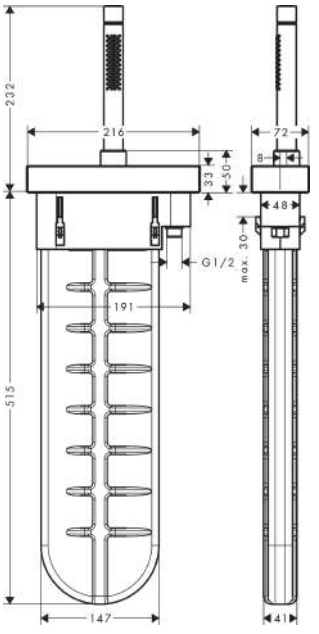

AXOR

**AXOR Edge**
**Rim-mounted bath set**
Surfaces: **polished gold-optic** Art. no. : **46470990**

## Flowchart

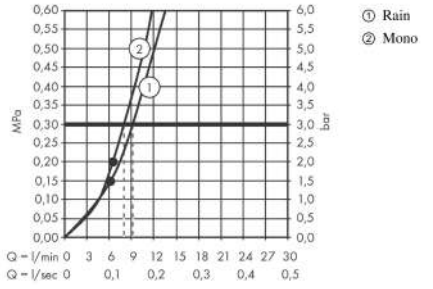


The consumption was measured in combination with the appropriate fittings (thermostat/mixer/ in-wall valve) to reflect actual application in practice.