AXOR

AXOR Starck V
2-hole basin mixer 110 with waste set
Surfaces: Article Number: **12115990**

product features

- consists of: 2-hole basin mixer, waste set
- ComfortZone 110
- projection: 125 mm
- spout height: 106 mm
- swivel range adjustable in 3 steps 95°, 120° or 360°
- spray type: laminar spray
- EasyClick connection between body and spout with SafetyStop-function
- Spout is dishwasher safe
- material spout: crystal glass
- maximum flow rate at 3 bar: 4 l/min
- ceramic cartridge
- non-closing waste set
- connection type: G ⅜ connections
- connection dimension: DN15
- handle can be positioned on the right or left
- not recommended for the public and semi-public area

Technology

EcoSmart

Comfort Zone

Product image
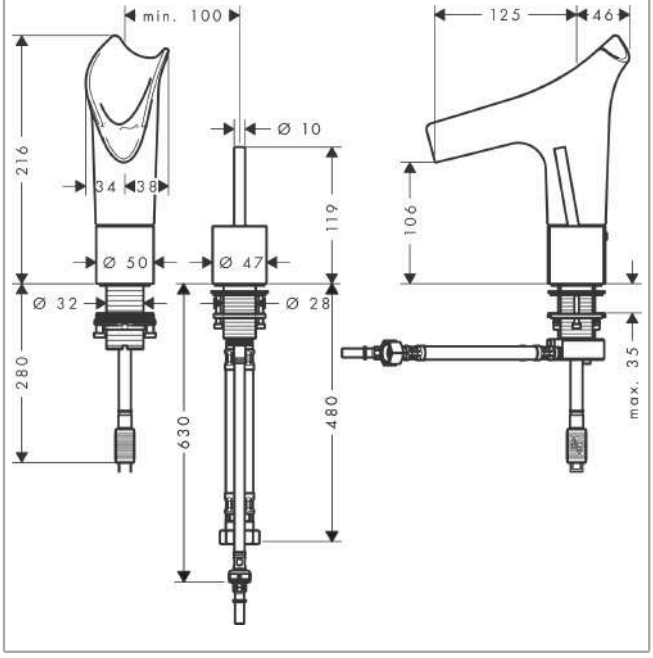
Scale drawing