AXOR

AXOR Starck
Single lever basin mixer 170 with pin handle without waste
Surfaces: Art. no. : **10123260**

product features

- Consists of: single lever basin mixer, waste set
- ComfortZone 170 provides space for greater freedom of movement
- spout 112 mm long
- spout height: 165 mm
- free-standing installation
- Spray pattern: normal spray
- Maximum flow rate (at 3 bar): 5 l/min
- ceramic cartridge
- non-closing waste set
- QuickClean technology for easy limescale removal
- operating pressure: min. 1 bar / max. 10 bar
- please specify when ordering if required for low pressure

Article Details

Price excl. VAT	£ 835.90

Technology

Product image

Scale drawing

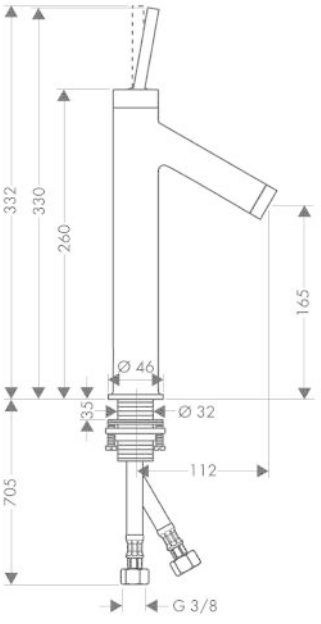

AXOR

AXOR Starck
Single lever basin mixer 170 with pin handle without waste
Surfaces: Art. no. : **10123260**
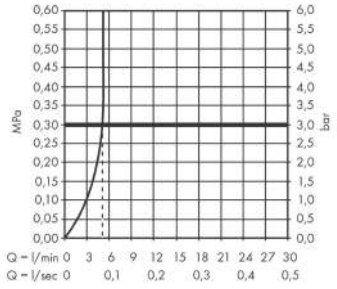
Flowchart